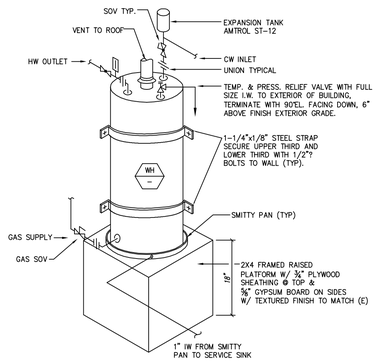

WH — WATER HEATER DETAIL

N.T.S.

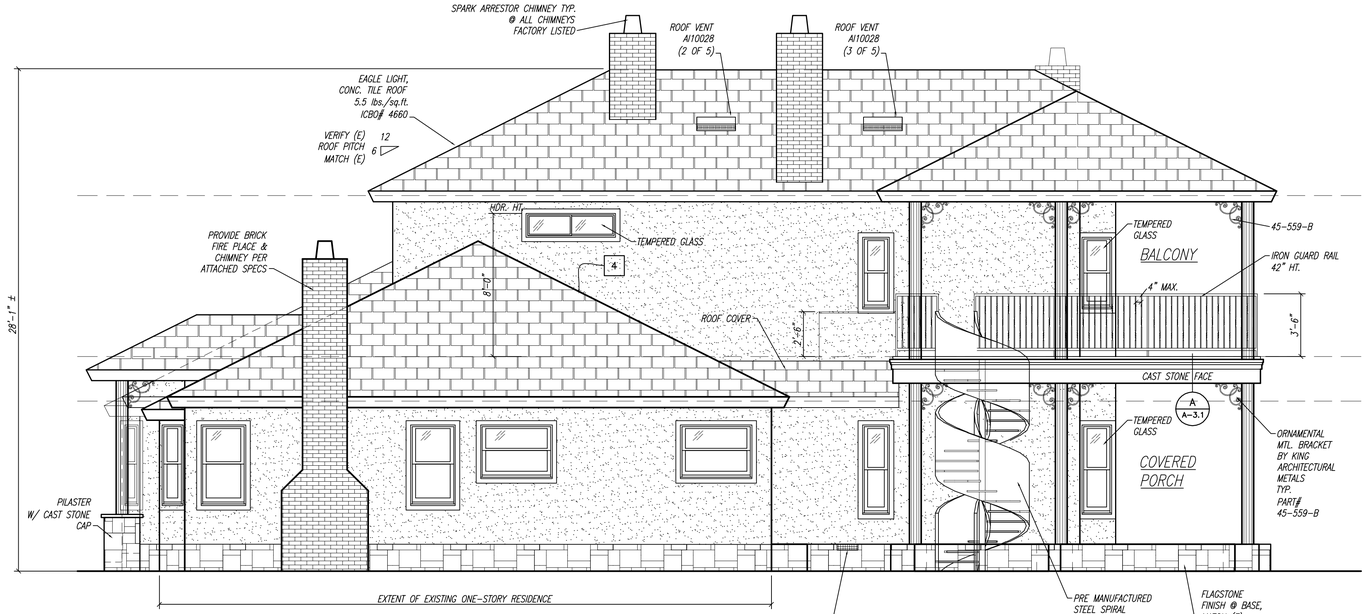

1 SOUTH ELEVATION
1/4" = 1'-0"

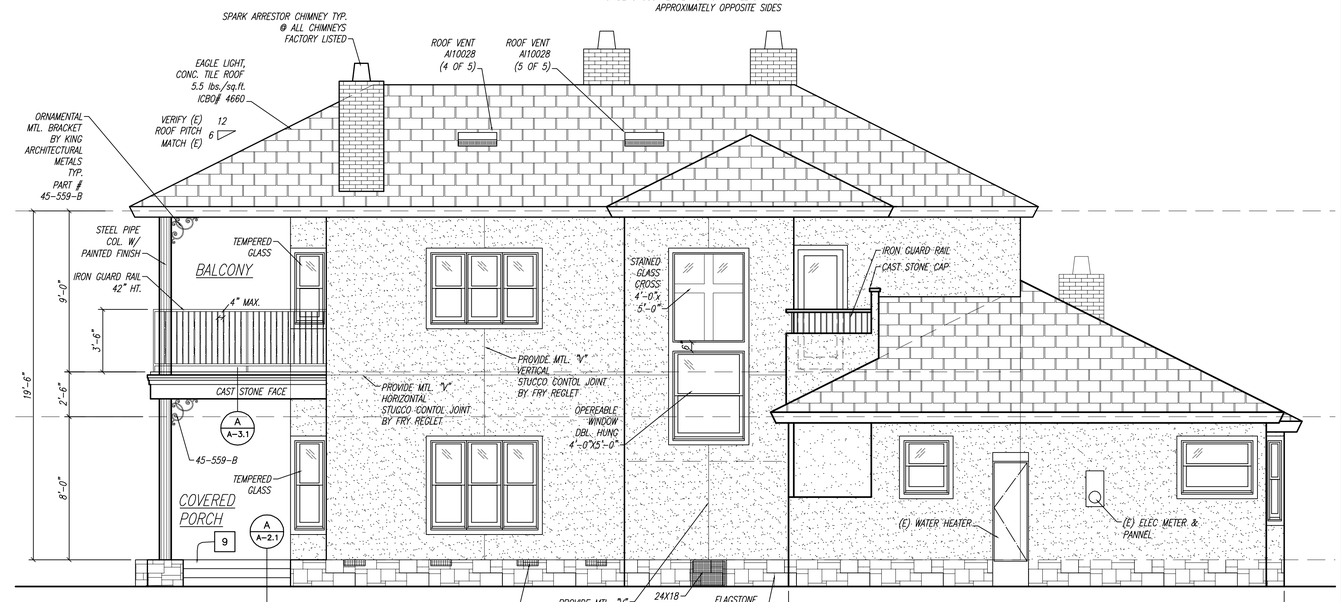

2 NORTH ELEVATION
1/4" = 1'-0"

#	REVISION
–	–

PREPARED BY:

EAST • STAR • DESIGN • BUILD

Dallas / Ft. Worth, TX
www.EastStarDesign.com

APPLICANT:

DRAWING TITLE: NORTH & SOUTH ELEVATIONS

PROJECT: Two Story Additon

DRAWN BY: G.G. & ASQ

DATE: 09/12/06

PROJECT #: 033

SHEET #: (5 OF 15)

A-2.2